REVISION HISTORY			
Rev	DESCRIPTION	DATE	APPROVED

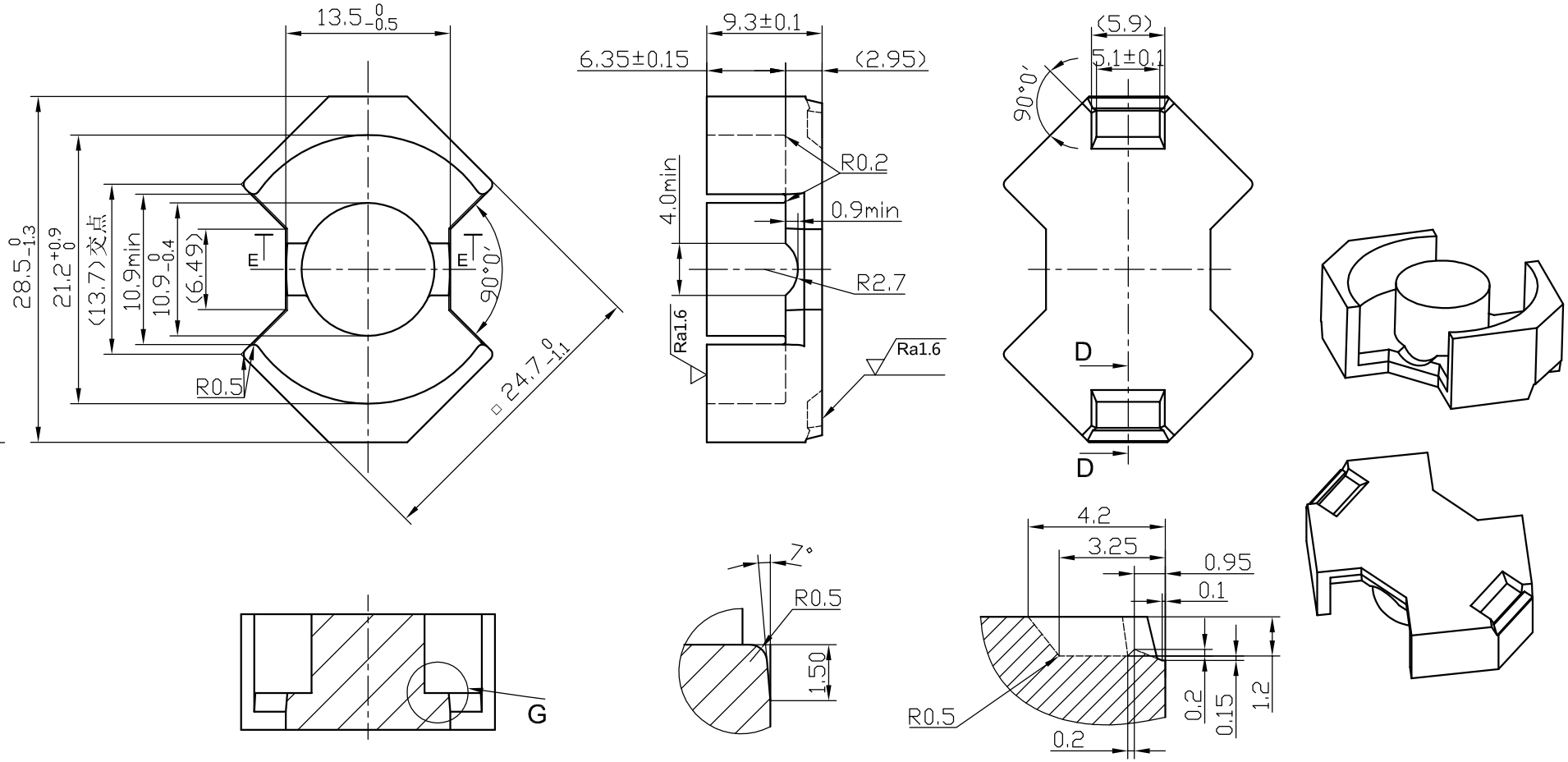

Section E-E

Detail G

Section D-D

	Scale 2 : 1	Material	Customer Part number RM-10/I	
Unit: mm	Standard tolerances ±0.1		Product Name RM-10S	
Approved by Y.Higuchi	Created by Jh.Huang	Document type Production drawing	Rev 00	Drawing No. PY180421M01
Hitachi Metals (Hong kong) Ltd. Panyu Factory			Date of issue APR 21 2018	Sheet 1/1